ALL DIM. ARE IN mm

DO NOT SCALE

IF IN DOUBT ASK!

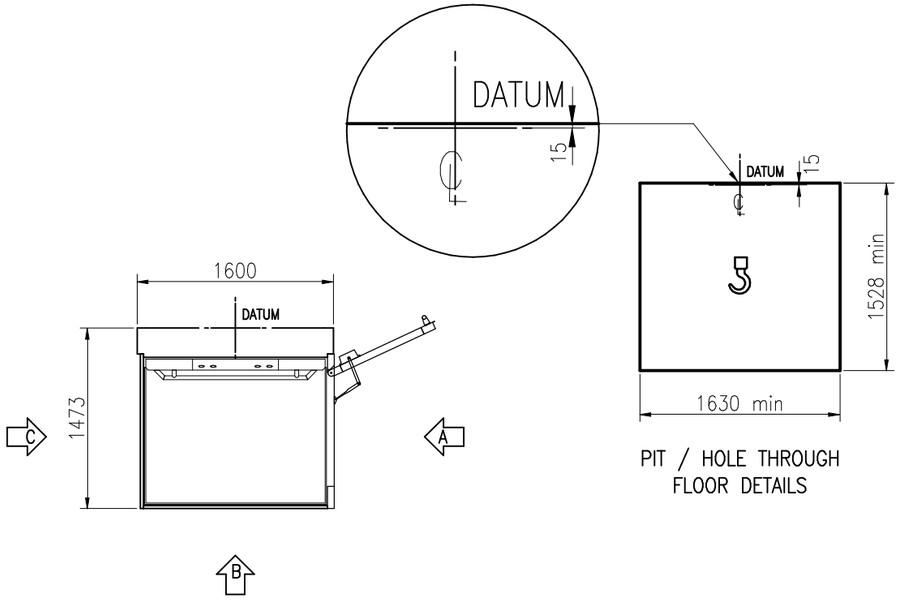

PIT / HOLE THROUGH FLOOR DETAILS

SECTION THROUGH LIFT AT GROUND FLOOR

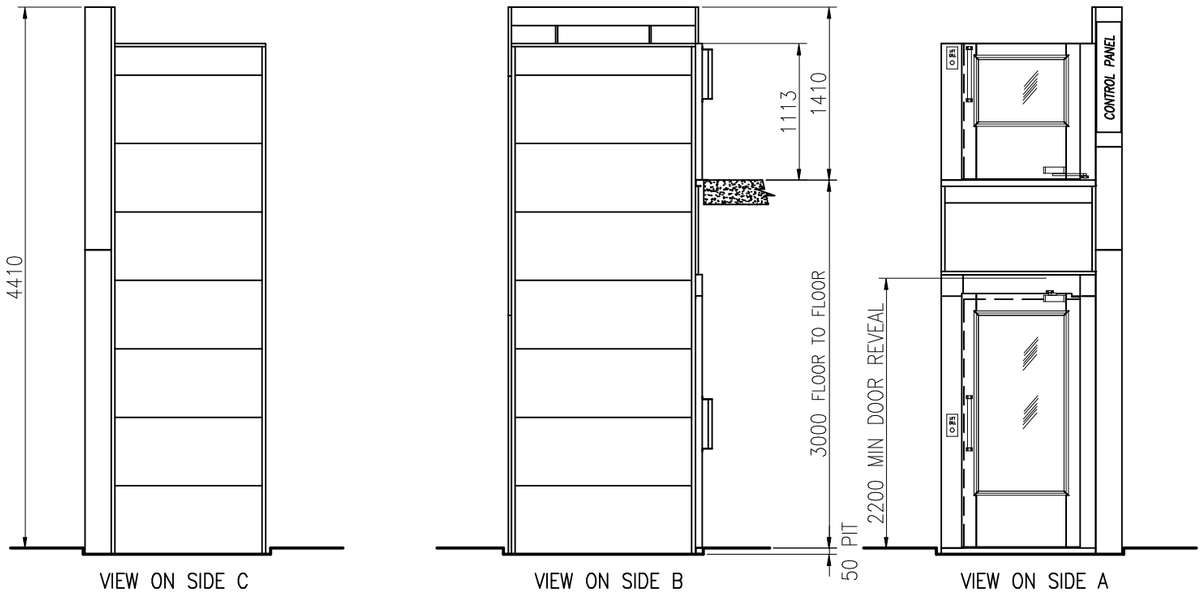

VIEW ON SIDE C

VIEW ON SIDE B

VIEW ON SIDE A

SPECIFICATION

VERTICAL PLATFORM LIFT
FOR USE BY PERSONS WITH IMPAIRED MOBILITY ONLY
LOADING TO 400kg, TWO PERSON OCCUPANCY WITH FULLY ENCLOSED SHAFT
PLATFORM SIZE 1480mm x 1100mm

ELECTRICAL REQUIREMENTS

1 LIFT POWER SUPPLY
1 PHASE 230V 20A or
3 PHASE 415V 10A

2 CEILING LIGHT POWER SUPPLY
1 PHASE 230V 6A

LIFTING BEAM / POINT REQUIREMENTS

LIFTING BEAM / POINT REQUIRED
RATED AT 500kg SWL

OPTIONS AVAILABLE

- PIT
- SPLIT MAST
- POWERED DOOR ACTUATORS
- GLAZING
  - SIDE A
  - SIDE B
  - SIDE C
- MAST CLADDING TO FLOOR
- REAR CLADDING PANELS
- CEILING WITH LIGHT FITTING
- POWERED EMERGENCY LOWERING
- STAINLESS STEEL DOOR HANDLES
- STAINLESS STEEL GRAB RAIL
- MAST SUPPORT BRACKETS
- KEY SWITCH DOOR CALL POINTS
- AUTODIALER
- VOICE ANNUNCIATION (PLATFORM)
- INDUCTION LOOP
- SUPPLEMENTARY VISUAL ALARM
- AUDIBLE ANN. ON LANDING (GONG)
- VISUAL ANN. ON PLATFORM
- VISUAL ANN. ON LANDING
- EXTERNAL ROOF

ISSUE	DRN./DATE	CHANGE DETAILS
A	A.J.ROLLINGS 08 NOV 06	ORIGINAL ISSUE

CLIENT
–
–
–
–

TITLE
VERTICAL LIFTING PLATFORM
TYPICAL LAYOUT DRAWING
HALF DOOR

CONTRACT NO: –
ORIGINAL SCALE: 1:50
DRAWING NO: K–TYP06

Dalby

HARRY DALBY ENGINEERING LTD
GLOUCESTER CRESCENT WIGSTON LEICESTER LE18 4YQ
TEL: 0116 291 6000 FAX: 0116 291 6001

THIS DRAWING IS ISSUED SOLELY ON THE UNDERSTANDING THAT IT IS COPYRIGHT AND CONFIDENTIAL. IT MAY NOT BE USED OR REPRODUCED WITHOUT PRIOR WRITTEN CONSENT OF THE COMPANY

THIRD ANGLE PROJECTION

A3

DRAWING APPROVAL

DRAWING APPROVED BY DISTRIBUTOR

SIGN..... NAME..... DATE .../.../...

DRAWING APPROVED BY CLIENT

SIGN..... NAME..... DATE .../.../...